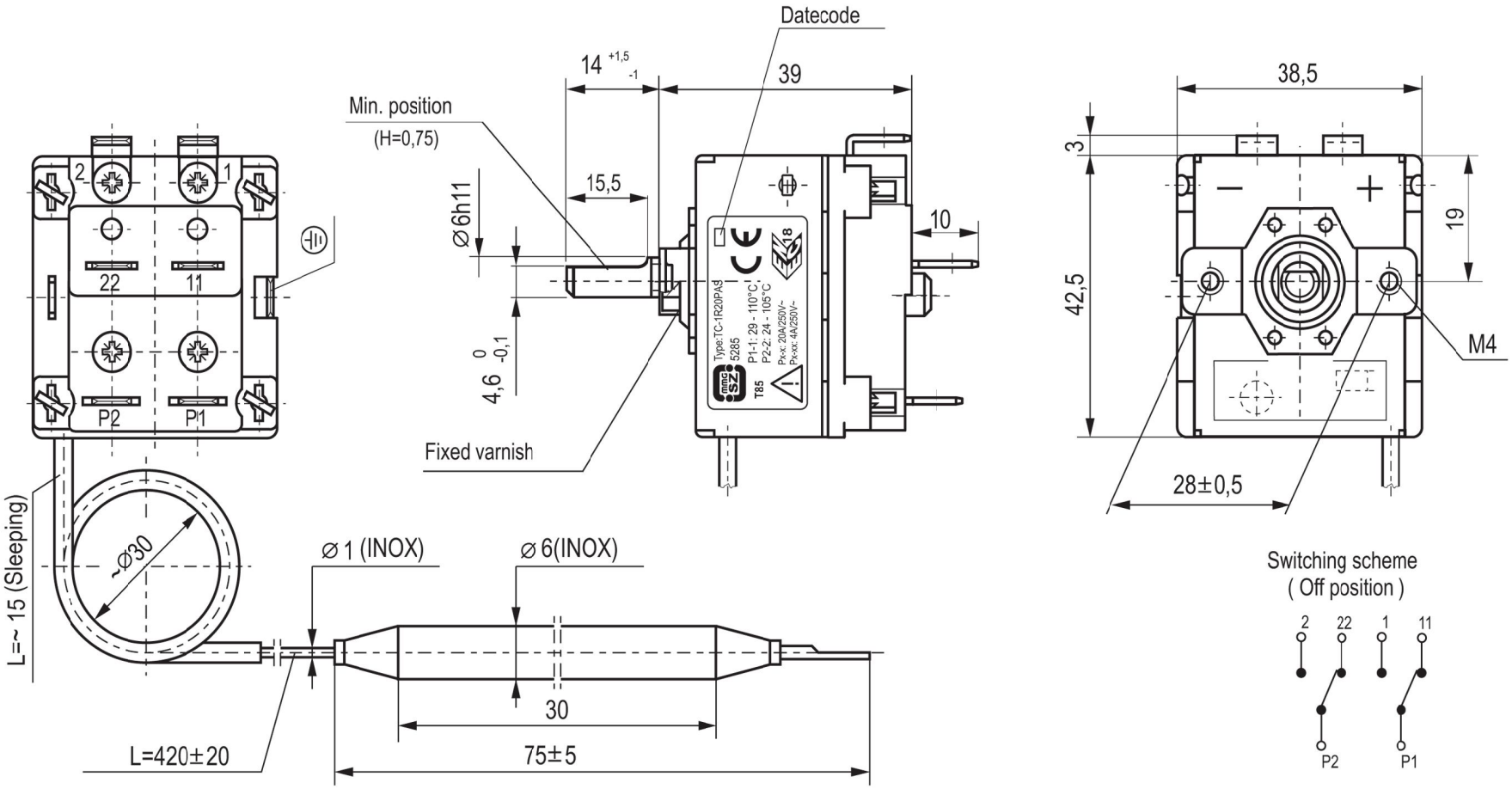

Switching scheme
(Off position)

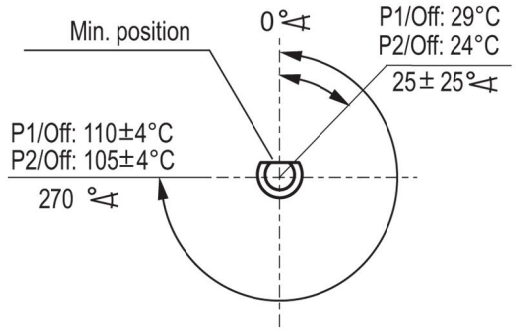

Temperature range P 1 - 1	: 29 - 110 °C
Temperature range P 2 - 2	:24 - 105 °C
Switching difference (dT)	: 5±2 K
Max. allowed sensor temp.	: 150 °C

Switching power	Px-x: 16(4)A/400V~ Px-xx: 4(1)A/400V~
Max. Allowed temp.	85 °C

	Date	Signature	Designation:	Type: TC-1-R-20-P-A-S
Drew by			Thermostat 2 pole	Drawing nr.: 5285
				Subheading: 0

sales@mmgszek.hu
www.mmgszek.hu