LUMEL
EVERYTHING COUNTS

AC/DC TRANSDUCER

T23CT

USER'S MANUAL

CE

1. APPLICATION

The hallotron transducer is designed for continuous conversion of the effective DC and AC into a standard DC signal.
The transducer's output signal is galvanically isolated from the input signal.
The transducer is mounted directly on the busbar using mounting screws, on the wall or on a 35 mm din rail using additional fasteners.
The housing of the transducer is made of plastic. The spring clamps allow for connection of wires up to 2.5 sq. mm.

2. TRANSDUCER SET

Complete set of the transducer includes:

1. T23CT transducer	1 pc.
2. mounting screws with nuts to mount on the busbar	2 pcs.
3. fasteners for wall mounting	2 pcs.
4. DIN rail mounting adapter /optional/	1 pc.
5. User's manual	1 pc.

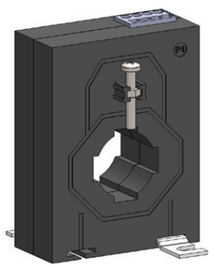

Fig. 1: Transducer set

3. BASIC REQUIREMENTS, OPERATIONAL SAFETY

In terms of operational safety, the transducer meets the requirements of EN 61010-1 standard.

Safety instructions:

- The transducer installation and connection should be made by qualified personnel. All available protection requirements must be taken into consideration.
- Before turning the transducer on verify the connections.
- The transducer meets the requirements for electromagnetic compatibility in industrial environment.
- A switch or a circuit-breaker should be installed in the building or facility. It should be located near the device, easily accessible to the operator, and suitably marked.

4. INSTALLATION

The T23CT transducer is adapted to be mounted on the busbar by means of mounting screws, on the wall - by means of additional fasteners or on a 35 mm rail bracket according to EN60715 using an additional adapter. Dimensional drawing is shown in Figures 1.

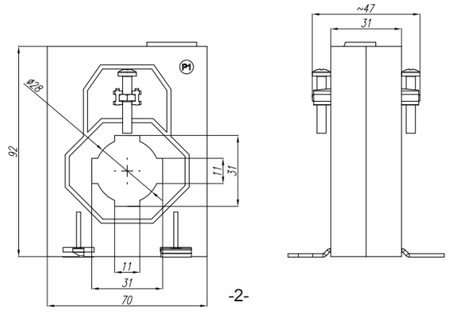

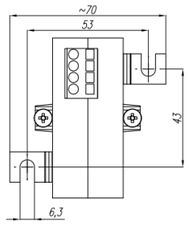

Fig. 2: Dimensional drawing of the transducer

5. DESCRIPTION

5.1 Principle of operation

The current flowing through the busbar creates a magnetic field. Using the Hall effect, the sensor generates an electrical voltage proportional to the current. In the further part of the electronic circuit this voltage is converted into a standard current signal.

5.2 External connections diagram

External connections are shown in Figure 2.

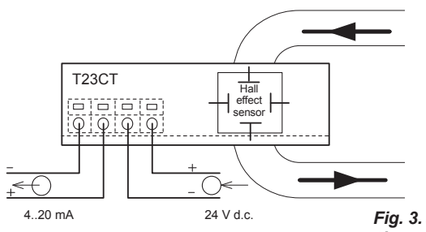

Fig. 3. External connections of the transducer

6. TECHNICAL DATA

Power consumption:
- in power supply circuit ≤ 5 W
- in current circuit ≤ 0.2 VA

Analog output: 1 output: 4.. 20 mA
Load resistance ≤ 500 Ω
Response time 500 ms
Intrinsic error 1 %

Spring terminals:
cross-section of connected conductors
0.08 .. 2.5 mm²

Degree of protection:
housing IP 65
terminals IP 40

Weight: 0.3 kg

Housing dimensions: 70 x 92 x 47 mm

Busbar cross-section: 30 x 10 mm

Reference conditions and rated operating conditions:
- supply voltage 24 V ± 20% d.c.
- input signal: 0 ... 0.1...1.2In; frequency d.c. or 20..45..70 Hz; sinusoidal (≤THD 8%)
- ambient temperature -25 ..23..+55 °C, klasa K55 wg EN61557-12
- storage temperature -40 ..+70 °C
- humidity 0 .. 40 ..60 ..95 % (inadmissible condensation)
- permissible power crest factor: 2
- external magnetic field 0...40...400 A/m d.c. 3 A/m a.c. 50/60 Hz

- operation position any
- warm-up time 15 min.

Additional errors:
in % of intrinsic error
- due to ambient temperature changes < 50 % / 10 °C
- for THD > 8% < 50 %

Standards met by the transducer
Electromagnetic compatibility:
- immunity to interference in accordance with EN 61000-6-2
- noise emission acc. to EN 61000-6-4

Safety requirements:
according to EN 61010-1 standard
- insulation between the busbar and other circuits: double,
- installation category III
- degree of pollution 2
- maximum operating voltage relative to earth
  - of the busbar 600 V
  - for power supply voltage and analog output: 50 V
- altitude < 2000 m.

7. ORDERING CODE

Table 1

Transducer T23CT -	X	X	XX	X	X
Primary current In [A]:					
50	1				
100	2				
150	3				
200	4				
300	5				
DIN rail mounting kit:					
without		0			
with		1			
Version:					
standard			00		
with a graphene sensor*			01		
Language:					
polish/english				M	
Acceptance tests:					
without additional requirements					0
with quality inspection certificate					1
with a test certificate					2

* after agreement with the manufacturer

Ordering example:
Code: **T23CT-4 1 00 M 0** means:
T23CT - T23CT tranducer,
4 - primary current 200 A,
1 - with DIN rail mounting kit,
00 - standard version,
M - Polish-English language version,
0 - without additional requirements.

8. ACCESSORIES

In the standard version, the transducer is delivered with a set of screws, nuts and handles. However, when when we want to mount the transmitter on a DIN rail we can use the LH000-0904-130-128 DIN rail mounting kit delivered with orders T23CT-X 1 XX M X (with DIN rail mounting kit).

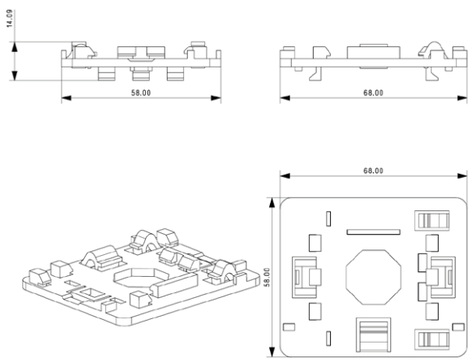

DIN rail mounting kit LH000-0904-130-128

2) Busbar and wall mounting kit
- Thread cutting screw 4x45 mm – 2 szt.
- Wall mounting clamp – 2 szt.
- Swivel – 2szt.
- Shoe for self tapping M4 screw – 2 szt.

Ordering code: LH000-0904-130-142

G215-LLM-09

LUMEL
EVERYTHING COUNTS

LUMEL S.A.
ul. Sulechowska 1,
65-022 Zielona Góra, POLAND
tel.: +48 68 45 75 100
www.lumel.com.pl

Export department:
tel.: (+48 68) 45 75 139, 45 75 233, 45 75 321, 45 75 386
e-mail: export@lumel.com.pl